Operating Manual

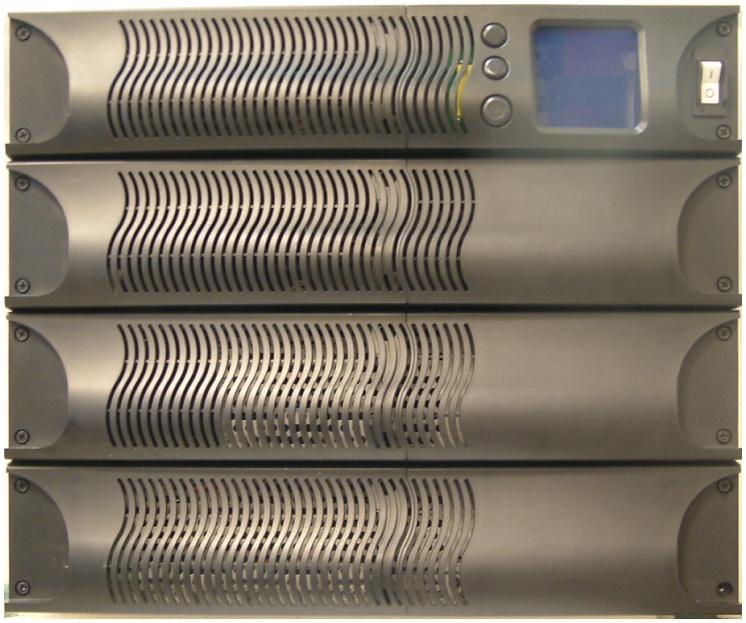

FP6000 On-Line UPS

Introduction

This user manual has been written to provide basic information about the FP6000 UPS.

It will describe the key features of the UPS, as well as detail referring to unpacking and installation, operation & configuration and troubleshooting. It also includes a section on software installation and general connectivity.

The specification section outlines all of the detailed parameters of operation of the FP6000 UPS.

The UPS should be installed according to the instructions in this manual. Failure to do so could result in safety issues. It could also invalidate your warranty.

Safety Information

Please retain this user manual in close proximity of the UPS for future reference.

Since the UPS unit operates from mains power and contains a number of high current back-up batteries, the information in this chapter is important to all personnel involved. Please take the time to read this section before unpacking, installation and operation of this UPS.

Storage and transportation

Because of the high energy stored within the batteries, the UPS equipment must be handled with due care and attention. The UPS must always be kept in the position marked on the external packaging and must not be dropped.

Installation

Do not operate the equipment in the presence of flammable gases or fumes. Operation of any electrical equipment in such an environment constitutes a safety hazard. Do not place the UPS in an unventilated room or enclosure.

The UPS must be installed in accordance to the instructions within this manual. Failure to recognise the electrical hazards could prove fatal.

Do not remove or unplug the input cord when the UPS is turned on. This removes the safety ground from the UPS and the equipment connected to the UPS.

Do not open the UPS cabinet. Some components inside the UPS cabinet carry high voltage. To touch them may prove fatal. All operations inside the UPS must be carried out by an authorised service engineer from the manufacturer or agent authorised by the manufacturer.

Batteries

Once batteries have reached the end of their life, ensure they are disposed of properly. Refer to your local codes for disposal requirements.

Never dispose of batteries in a fire. Batteries may explode when exposed to flame.

Replace batteries with the same number and type of batteries or battery packs as originally installed in the equipment.

Contents

Contents

1. General Description

1.1. Basic function of the UPS

An Uninterruptible Power Supply is designed to provide a battery based source of AC power, such that under mains fail conditions the load can be supported for a specified period of time.

This time is generally dictated by the period required to shutdown equipment in an orderly fashion, generator-starting time or for an engineer to attend site. In a high percentage of cases, utility failure is often less than 5 minutes.

This period is often only a “bridge” between mains fail and generator starting.

1.2. General technical overview

Under normal conditions mains is fed into the rectifier which provides DC power to the Inverter and DC (via the charger) to charge the batteries. The inverter then feeds the load continuously. If the primary mains supply fails, the UPS simply uses the secondary supply (if connected) thus maintaining power to the load without using it’s batteries.

If the auxiliary and primary supply fail, then the UPS continues to supply the load via the inverter but the inverter now takes its power from batteries (via the boost converter) not the rectifier. The load therefore sees no change. The static switch or auto bypass provides a fail-safe mechanism in UPS overload or UPS fault conditions of Inverter fail, rectifier fail & battery failure.

This On-line topology of UPS provides a true sinewave output.

1.2. General description – Block Diagram

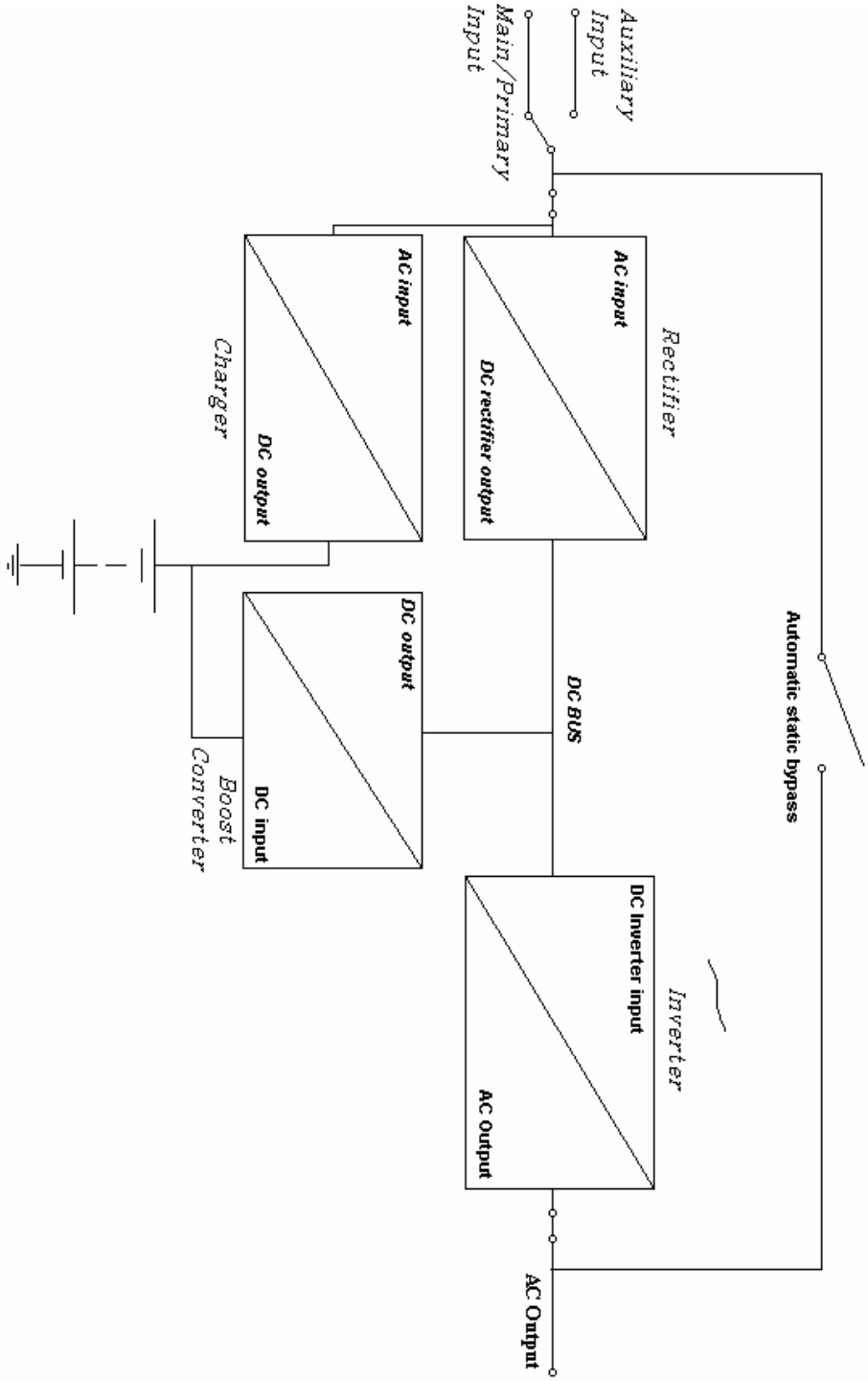

1.3. Key Features of the FP6000

Self configuring battery pack.
In the FP6000 design, the battery pack is configured in multiples to achieve the required string voltages at higher kVA ratings.
The advantage of this is:

1. The right battery packs are always available.
2. The blocks are “plug and play” so installation is very fast.
3. Technical installations people are not needed to install/change the batteries
4. The packs are small enough that they are considered a “one man lift” so shipping & installation is much easier.

Dual mains input. Most UPS’ have one mains input, however the FP6000 has 2. It is common for comms rooms to be fed from 2 supplies (possibly 2 phases of the same supply) so that if there is a problem on one supply the other can take over and prevent the UPS from needing to discharge its batteries until there is no other option. In order to do this, ordinarily, a static switch is required which selects “Mains 1” or “Mains 2” as the input to the UPS depending upon which is available. Since FP6000 has 2 mains inlets, it is not necessary to have a static switch.

The advantages of this are:

1. Cost. No additional static switch
2. Less rack space. A typical static switch would be either 1U or 2U in height, once installed in the rack this takes away space which could be used by other equipment
3. The UPS is never running from battery (which has a finite life to it) when there is another mains supply available. Extended “uptime” for the load and extended lifetime for the batteries.

1.3. Key Features cont….

Multi format. FP6000 is multi-format design and can be rack-mount or free-standing straight from the box; this achieves 3 important objectives:

1. Cost reduction by standardisation of packaging.
2. Cost reduction by minimisation of stock levels (the right format is always available!)
3. Fits all standard (600x600) racks as models (UPS and Battery Packs) are only 510mm deep.

This also gives the flexibility to remove a UPS from a rack when space becomes limited and give the option of free-standing it, without the need to purchase a different model.

Rotating Back-lit LCM for monitoring and control. FP6000 has a fully rotating back-lit LCM (which shows load, voltage, temperature etc) which is simply twisted to be the right way up. This makes the UPS much more user friendly, especially if it's in a poorly lit room (i.e. during power failure conditions).

2. Storage & Unpacking

2.1. Boxes supplied

The FP6000 can be supplied in a number of boxes (even if only one UPS has been ordered). The number of boxes should be as below;

Number of boxes supplied;

Unit	Battery module	Number of boxes (Shipped as one unit)
FP6000	2 battery modules	3 boxes required

If there are not enough boxes to make up the UPS please contact order point immediately.

This is clarified in the drawings below;

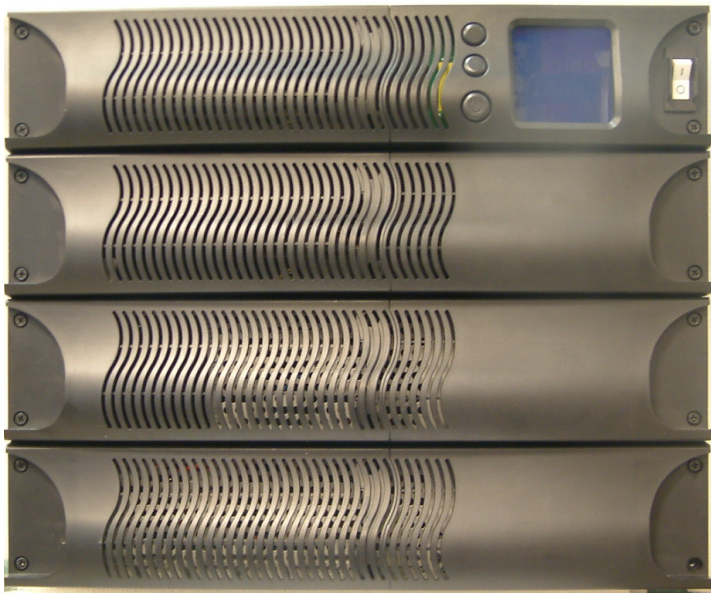

FP6000 UPS uses two battery modules (containing in total four standard battery packs). The UPS electronics module ships as one box, and each battery module ships as a separate box. FP6000 ships as 3 separate boxes.

2.2. Box contents

The UPS comes complete with all cables required for operation, and is also shipped with software and racking ears for 19” shelf mounting. A full list of the box contents is provided below;

FP6000

3 boxes contain

Box 1:
UPS Electronics module
REPO connector
RS232 Cable
Software CD
Manual CD
19” rack ears (+screws)

Box 2:
Battery module
Battery connection cable
19” rack ears (+screws)
1 set key lock bolts

Box 3:
Battery module
Battery connection cable
19” rack ears (+screws)
1 set key lock bolts

3. Installation and Set-up

3.1. Environment and Positioning

When locating the UPS system, the following points should be remembered;

- Avoid temperature and humidity extremes. To maximise the life time of the batteries an ambient temperature of 15°C to 25°C is recommended.
- Provide shelter from moisture
- Make sure that ventilation and space requirements are met.
- Maintain clearance at front of UPS for user operations
- Ensure that the air vents at the front and rear are not blocked

3.2. Free-standing configuration

When using the UPS free-standing, the unit should be mechanical stood vertically.

The FP6000 are provided with key hole fixings to “lock” units together when located beside each other in free standing mode.

3.3. Rack-mount configuration

FP6000 are also shipped with front panel mounting ears. These allow the units to be used in rack mount/stack orientation.

The ears supplied are not designed to support the weight of the UPS. The UPS must either be support on guides or on a shelf within the 19” cabinet.

3.4. Rear Panel Features

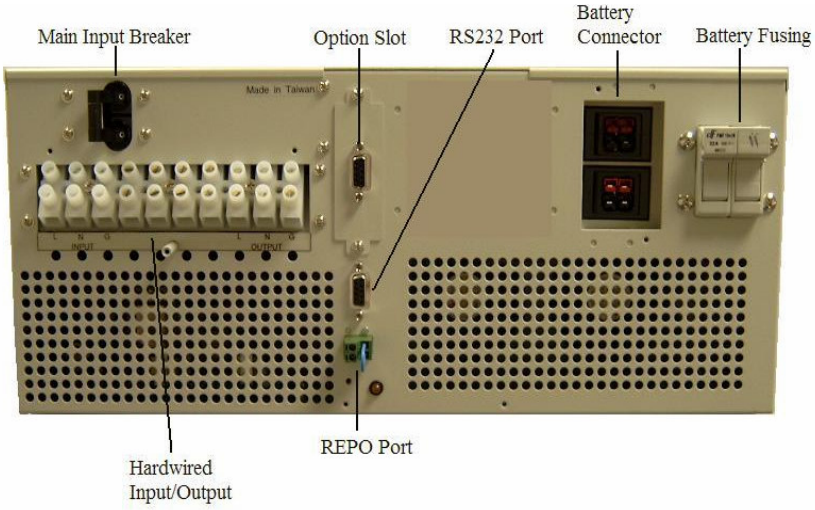

3.5. Power connection to the FP6000

In order to connect the battery module to the UPS on the FP6000, the battery connector cover must first be removed. See diagram below;

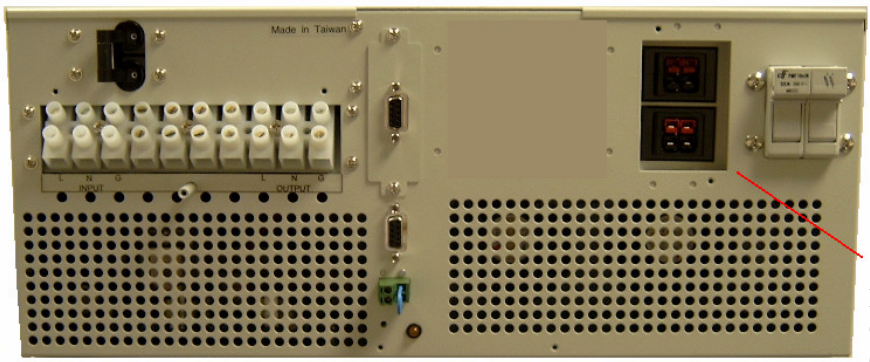

Battery Connector Cover Removed

Once this has been done the battery cables supplied can be connected between battery connector on UPS and battery connector on each battery module. The cable supplied has a simple push fit Anderson connector at each end.

3.5. Power connection to the FP6000 cont….

The Hardwire termination for the FP6000 provides input connection for the main supply & auxiliary supply, as well as output connection.

Connector Ratings and cable sizing;

Hardwire terminations will accept 10AWG/6mm2 cable for input and output wiring.

3.6. Communication Connectivity

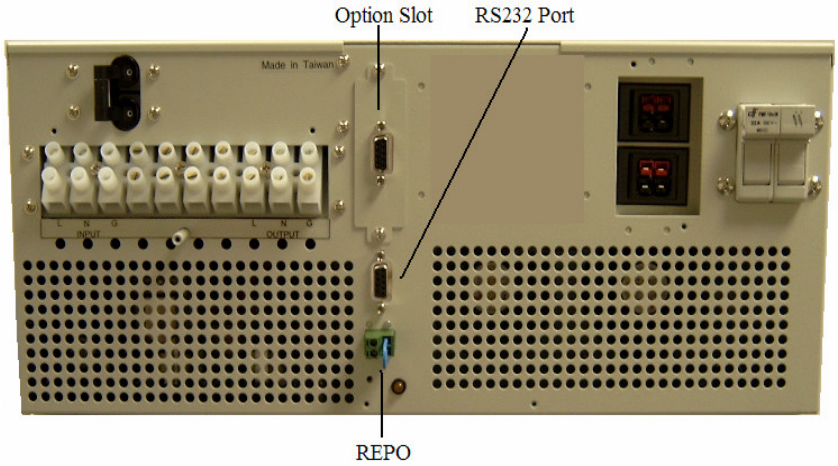

FP6000 are provided with the following communication ports

- Main RS232 port (fixed)
- Auxiliary RS232 port (fitted into option slot)
- REPO (remote emergency power off) port

The unit is supplied with one RS232 cable and one mating half REPO connector.

The RS232 cable will provide communications to a local computer using the supplied Cruiser software package.

The REPO connector can be used to shutdown the UPS from a customer-supplied switch in a remote location.

The following option cards are also available (installed in place of the auxiliary RS232 port).

- Network adapter/SNMP (fits in place of the option slot RS232)
- AS400 Volt free contact board (fits in place of the option slot RS232)
- USB card (fits in place of the option slot RS232)

3.7. RS232 detail

Main RS232 pin details

DB-9 Pins of the connector are as following figure:

PIN#	PIN Definition(UPS)	PIN Definition(PC)
2	Transmitted data	Received data
3	Received data	Transmitted data
4	DTE Ready	DTE Ready
5	Signal Ground	Signal Ground

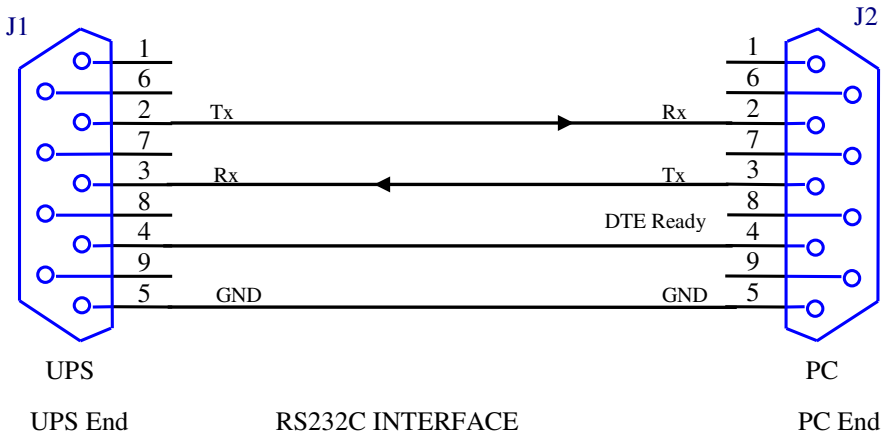

3.7. RS232 detail cont….

Option Slot RS232 pin* details

Pin out for the second RS232 port is as standard the same as the first. However, this can be changed to the format as shown below by removing the card and setting the 4 jumpers on the card to Megatec positon (from the PC position). This should only be done when UPS is off.

The RS232 interface shall be set as follows:

Baud Rate	**: 2400 bps**
Data Length	**: 8 bits**
Stop Bit	**: 1 bit**
Parity	**: None**

The Pin Assignments of true RS232 type are illustrated as follows:

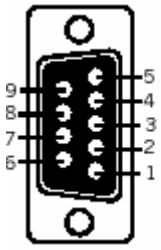

Pin 6: RS232 Rx
Pin 9: RS232 Tx
Pin 7: Ground

3.8. REPO Configuration

The REPO connector ships as standard with a wire link to make the connection between the pins which allows the UPS to operate with no additional wiring for applications where REPO is not required. For applications where REPO is required, use the following procedure.

Operating the REPO

The REPO feature shuts down the protected equipment immediately and does not follow the orderly shutdown procedure initiated by any power management software.

Any devices which are operating on battery are also shut down immediately. When the REPO switch is closed, the equipment will not return to battery power until the UPS input is re-cycled.

This can be done by shutting down the UPS and re-starting it.

Installation and Set-up

Use the following method to install REPO switch;

- Verify that the UPS is off and unplugged
- Remove the REPO connector from the rear of the UPS
- Connect isolated, normally closed, dry contacts (rated at 60Vdc maximum, 30Vac RMS maximum and 20mA maximum), between pins 1 and 2 as shown below;

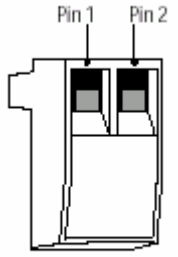

REPO Connector

- Use stranded, non-shielded wiring – size 18 – 22 AWG.
- Replace the REPO connector into rear of UPS
- Verify that the externally connected REPO switch is off, to enable power to the UPS output receptacles.
- Plug in the UPS and start the UPS by pressing the input breaker to “ON”
- Turn on the external REPO switch to test REPO function
- Turn off REPO switch and restart UPS for normal operation.

4. Operation

4.1. Description of front panel features

The diagram/table below show the basic functions of the front panel on FP6000.

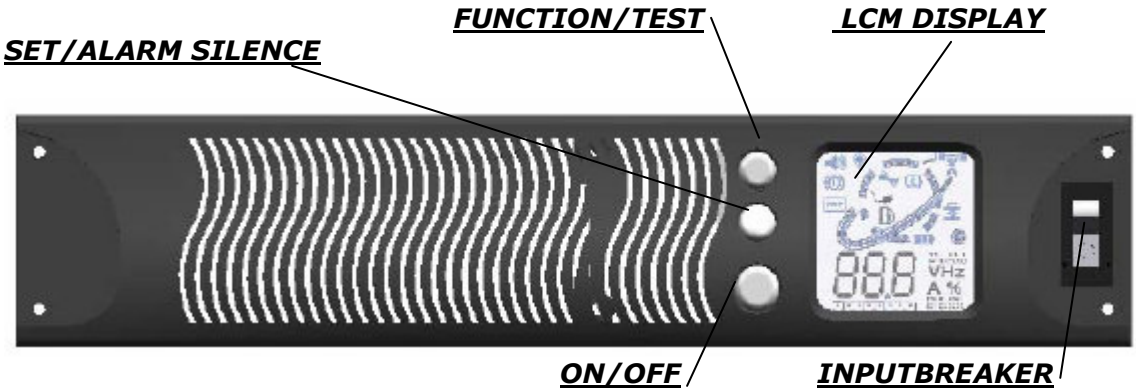

- **SYMBOLS USED ON GRAPHIC LCD DISPLAY**

Alarm: When the UPS fails, the symbol will flash.

Green Mode: When UPS is in Green Mode, the symbol will flash.

Fault: When the UPS has failed and must be repaired, the symbol will flash.

Test: When UPS is conducting Battery Self-Test under Normal Mode, the symbol will flash.

Load: The higher the load, the more bars will illuminate.

Inverter: When Inverter is normal, the symbol will illuminate.

Power Factor Corrector (PFC): When PFC is normal, the symbol will illuminate.

Input Power: When utility power is normal, the symbol will illuminate.

Charger: When charger is in normal operation, the symbol will illuminate.

Booster: When UPS starts Battery Booster, the symbol will illuminate.

Battery: The bars indicate an approximate amount of battery charge remaining. Each bar represents 25% of battery capacity.

High–speed Fan: UPS is in Battery Mode**.**

Medium–speed Fan: UPS is in Normal Mode.

Low–speed Fan: UPS is in Bypass Mode.

Front Panel Buttons

INPUT BREAKER SWITCH

This switch disconnects the input power to the UPS.

FUNCTION/TEST BUTTON

This button has two functions:

1. Manual Battery Test
   When the UPS is working under normal conditions, press this button to self-test the battery for 10 seconds. During this test, the battery will supply the UPS with power. If the battery are supplying unstable voltages, then the audible alarm will produce one long beep and the UPS will switch to receiving power from the utility source.

2. Configuration UPS Settings
   When pressed together with the SET/ALARM SILENCE button for three seconds, allows the user to configure UPS settings.

SET/ALARM SILENCE BUTTON

This button has three functions

1. Silence Alarms
   Press this button for one second and the alarms will be silenced. After the alarm is silenced, the UPS cannot audibly alert users of any additional problems.
   Change Selection

2. Pressing the button for second will allow the user to view various parameters and measurements including Input Voltage, Output Voltage, Output Frequency, Battery Voltage, percent of Load, percent of Input current, Internal Temperature of the unit, and Output Current.

3. Configuration Settings
   When pressed together with the FUNCTION/TEST button for three seconds, allows the user to configure UPS settings.

ON/OFF BUTTON

This button controls output power to the load and has two functions:

1. Force UPS into Bypass Mode.
2. Start UPS from battery when utility power in not available.

4.2. Starting and shutting down the UPS

Normal Start-up of the UPS

Step 1. Plug the UPS into an AC power source.
Step 2. Turn on the Input Breaker switch. The UPS will begin its start-up process by first going into Bypass Mode and then into Normal Mode. After entering the Normal Mode, the UPS is ready for operation.

Shutting down the UPS

Step 1. Press ON/OFF key for one second. The UPS will switch to Bypass Mode.
Step 2. Turn off the Input Breaker switch. Display will turn off.

Battery Start-up of the UPS

To turn on the UPS without using utility power, press the ON/OFF button. The UPS will begin supplying power through its batteries.

4.3 Operating Modes

- **NORMAL MODE**

During normal operation, utility power provides energy to the UPS. The UPS converts the utility power to computer-grade power for the connected loads. The UPS will also maintain the batteries at a fully charged state.

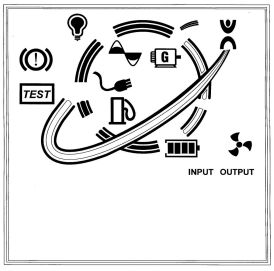

All indicators are stable except Alarm. The graphic LCD display shows indicators of load, Inverter, PFC, Input power, Charger, Battery, Fan in medium speed, Green Mode, Fault, and Test. A solid line shows the power flow from input to the load and batteries. The display will also show the status of the measuring parameters by pressing the SET/ALARM SILENCE button.

- **BATTERY MODE**

Battery Mode occurs in the event of a utility power failure or an extreme input voltage condition. The batteries will supply power to the connected load through the DC/DC converter and the DC/AC inverter. When utility power is restored, the UPS switches to Normal Mode operation and recharges the batteries. While in Battery Mode, an alarm will beep. The beeping frequency will continue to increase as an indication that the batteries are running low and that the UPS is about to shut down. If the UPS shuts down, then it will automatically restart when utility power is restored.

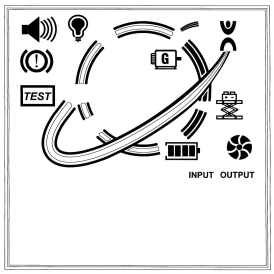

In Battery Mode, a solid line will be lit from the Battery symbol to Booster and Inverter symbols. The High-speed Fan symbol will also be lit. The battery bars will indicate the remaining battery capacity. As capacity decreases, the number of bars will also decrease.

For approximate battery run times, please refer to the Battery Run Time chart at the end of this manual. The run time is based on resistive load and an ambient temperature of 77°F (25°C). To increase the run time, turn off non-essential equipment or add an optional external battery module.

Operation

- **BYPASS MODE**

In the event of a UPS overload or internal failure, an audible alarm will sound and the UPS will switch to Bypass Mode where utility power is powering directly to the connected loads. However, Battery Mode won't occurs availably when the UPS:

- Is overheating.
- Has an overload condition of 101 to 110% for more than 120 seconds.
- Has an overload condition of 111 to 150% for more than 20 seconds.
- Has an overload condition greater than 150%.
- Detects a fault in the battery or UPS electronics.

In Bypass Mode, solid lines will be lit from the Input Power symbol to the Load symbol and from the Input Power symbol to the Charger and Battery symbols. The Low-speed Fan symbol will also be lit.

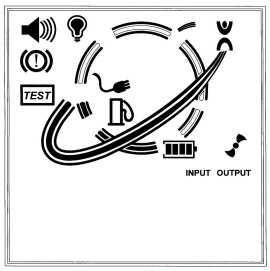

- **GREEN MODE**

When the UPS has Green Mode enabled, it will switch to Bypass Mode when the connected load is less than 3% of the UPS rating. The graphic LCD display will show Bypass Mode with the Green Mode symbol flashing. If the load is over 3% of the UPS rating, then the UPS will operate in Normal Mode with the Green Mode symbol lit. To enable or disable Green Mode, please refer to the Configuration Settings section of this manual or contact your service representative.

Configuration Settings

Press the FUNCTION/TEST button and SET/ALARM SILENCE button at same time for one second. Alarm will sound one beep; the unit is in Configuration Mode.

There are eight Bit columns at the bottom of the graphic LCD display. From left to right, they are identified as Bit 7 to Bit 0. When the UPS is in Configuration Mode, Bit 0 will be lit. Press the FUNCTION/TEST button to move between Bit 0 to Bit 6. When changing from Bit 0 to Bit 6, check to see if Bit 7 is lit. If it is, then that located Bit is set. Pressing the SET/ALARM SILENCE button will toggle between set and unset.

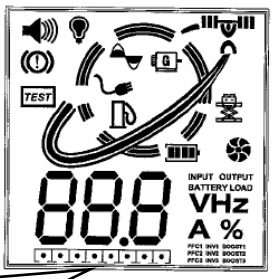

Bit 7	Bit 6	Bit 5	Bit 4	Bit 3	Bit 2	Bit 1	Bit 0

Bit Definition Table

Key Button	Setting	Bit Definition				
SET/Alarm Button	Status Setting	Bit 7	On=lit Off=unlit			
Function Button	Green Mode	Bit 3	On: Disable Green Mode Off: Enable Green Mode			
	UPS INVERTER OUTPUT VOLTAGE	Output Voltage	208V (100V)	220V (110V)	230V (115V)	240V (120V)
		Bit 1	Off	Off	On	On
		Bit 0	Off	On	Off	On

- Green Mode

Enable/Disable Green Mode

1. Pressing the *FUNCTION/TEST* and *SET/ALARM SILENCE* buttons at the same time for 1 second. Alarm will sound one beep; the UPS is in configuration mode.
2. Press the FUNCTION/TEST button until Bit 3 is lit. If Bit 7 is lit, then Green Mode is disabled. If Bit 7 is unlit, then Green Mode is enabled.
3. To change the setting, press the SET/ALARM SILENCE button once.
4. After changing to the desired setting, press the FUNCTION/TEST and SET/ALARM SILENCE buttons at same time for one second. An audible beep will sound and the Green Mode setting is set.

Operation

Output Voltage

1. Press FUNCTION/TEST and SET/ALARM SILENCE buttons at the same time for one second. A short beep will signal that UPS is ready for configuration settings.
2. Press the Function/Test button until Bit0 or Bit 1 is lit. If the Bit0 and Bit1 are lit, then output voltage is 240V for FP1000/ FP1600/ FP2500/ FP3200 or Output voltage is 120V for FP1000/FP1600/FP2200/FP3000.
3. To change the setting, press the SET/ALARM SILENCE button once.

Example: Change output voltage form 100V to 120V

1. Press the FUNCTION/TEST button until Bit 0 is lit.

Bit 7	Bit 6	Bit 5	Bit 4	Bit 3	Bit 2	Bit 1	Bit 0
							●

2. Press the SET/ALARM SILENCE button so that Bit 7 is lit.

Bit 7	Bit 6	Bit 5	Bit 4	Bit 3	Bit 2	Bit 1	Bit 0
●							●

3. Press the FUNCTION/TEST button so that Bit 1 is lit.

Bit 7	Bit 6	Bit 5	Bit 4	Bit 3	Bit 2	Bit 1	Bit 0
						●	

4. Press the SET/ALARM SILENCE button so that Bit 7 is unlit.

Bit 7	Bit 6	Bit 5	Bit 4	Bit 3	Bit 2	Bit 1	Bit 0
●						●	

5. Press the FUNCTION/TEST and SET/ALARM SILENCE buttons at the same time for one second. A short beep will signal that the UPS has returned to normal display.

6. Restart the UPS.

4.4. Audible Alarms

The UPS provides an overview of the alarm/alert functions via the audible alarm produced.

These can also form part of the trouble-shooting guide – see page 32

Audible Alarms

- Battery Mode (DC Mode)
  ___ . ____
- Battery Low
  ___ . ___ . ____ . ____ . ____
- Line Voltage fault
  ____ . ____ . ____
- Line Frequency fault
  __ . __ . __ . __
- Over Temperature
  __ . __ . __ . __ . __
- Input Over Current
  __ . __ . __ . __ . __ . __
- Overload or UPS Fault
  _____ .
- Charger Fault
  ___ . ____ . ____ .

Key

____ Buzzer On

. Buzzer Off

Operation
5. Trouble Shooting

5.1. Basic trouble shooting

Problem & Possible Cause	Solution
UPS will not turn on	
REPO active	Ensure REPO is connected and external switch is reset
Input breaker not switched on	Ensure that UPS input breaker on front panel has been switched to "ON" position
UPS input cct breaker may have tripped	Ensure that the load on the UPS is less than the rating label power stated. The UPS may have overloaded.
Input/battery cables not correctly fitted	Ensure that input cables and battery cables are securely fitted into the UPS and battery pack. Check battery breaker is switched to "ON" position
UPS will not provide power to the load	
No output from output cable	Check cable is correctly installed into rear of UPS.
Output fails as soon as load connected	make sure that load does not exceed maximum rating of UPS
UPS operates from battery despite mains being available.	
Input voltage out of tolerance	Check LCM reading of input voltage - it must be within specified limits of voltage and frequency – specification section 7.
Auxiliary mains input not working	Check that Auxiliary supply is plugged in at source.
Generator does not seem to power UPS, without UPS going to battery	Check generator is properly governed for both frequency and voltage. Some low grade generators will not supply a stable enough supply to run an UPS

Trouble Shooting

5.1. Basic trouble shooting cont….

UPS drops the load when it should Go onto battery	
When power fails the UPS drops the load When it should have gone into battery mode	The UPS was in bypass, probably because of overload - check the load status
The UPS beeps	See Audible alarm status page 29
UPS battery time not long enough or unit does not run on battery at all	
UPS works on battery, but required back up time is not as long as was Expected	Check to see if batteries are ok - use "test" function as described on page 23. If battery reported faulty - see changing the battery in maintenance section 5.2 Check to see load has not increased - this will reduce run time available from battery Shed non-critical load when mains fails.
UPS Beeping	
The UPS is beeping and I don't know why?	See the notes on page 29
Cannot see my UPS remotely/via RS232	
I cannot see the UPS via my RS232 or Network adapter card?	Check RS232/SNMP card connections on rear of UPS. Read the manuals that come with the options cards (within option card box) or see the software section in this manual

5.2. Replacing the batteries

FP6000

.

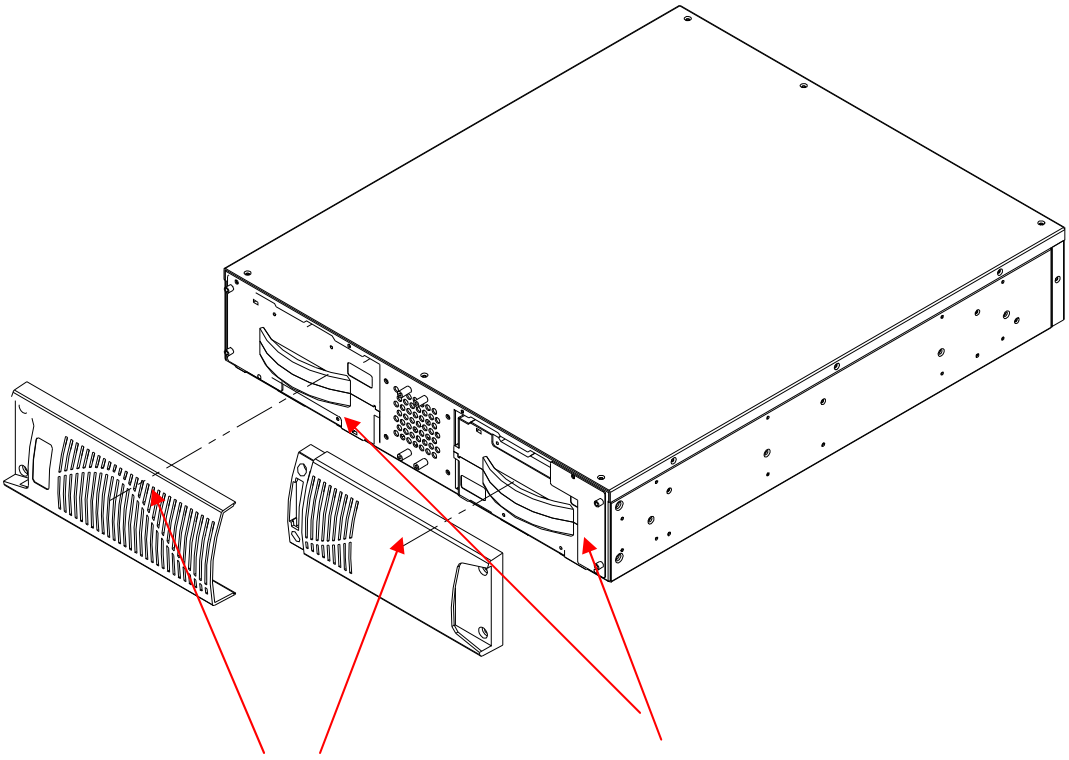

First remove both front panels as shown above. Then remove both retaining plates to gain access to the battery packs.

Battery packs can then be withdrawn using the handles provided and replacement packs can be fitted. Battery modules can be isolated from UPS if required by switching off the battery breaker on the rear of the battery module.

Warning: Removing the battery whilst the unit is supporting load could result in loss of power to load if mains fails during battery replacement.

Number of battery packs required;
FP6000 will need 4 packs (2 modules)

6. Software Set-up

6.1. General windows software installation

The following step by step guide is for Windows based operating systems. For installation instructions for other operating systems, please consult software manual as supplied on CD.

Place Cruiser CD in drive and it will auto run install program as follows (if not select “set-up” from file menu on CD);

Step 1: Click Next to continue

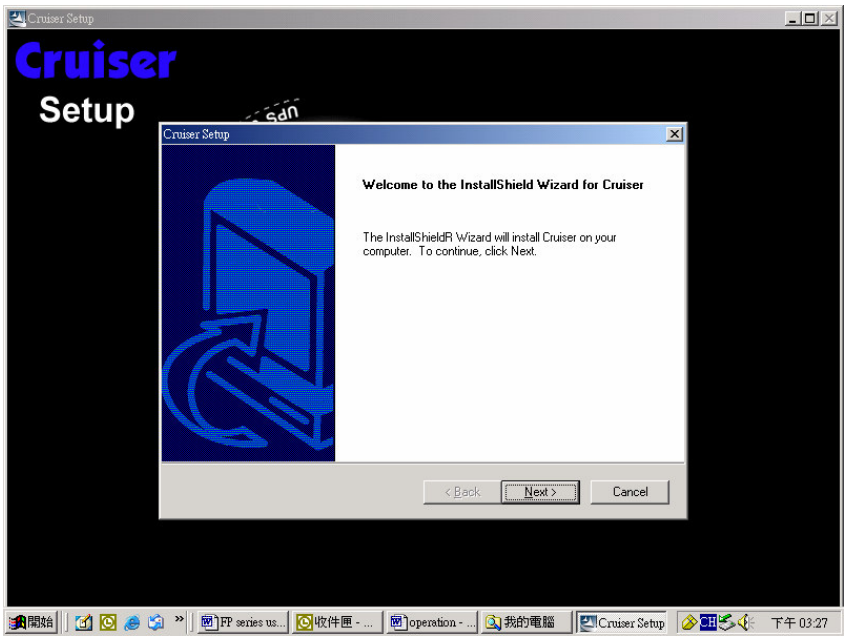

Software Set-up

6.1. General windows software installation cont…..

Step 2: Type in User Name and Company Name

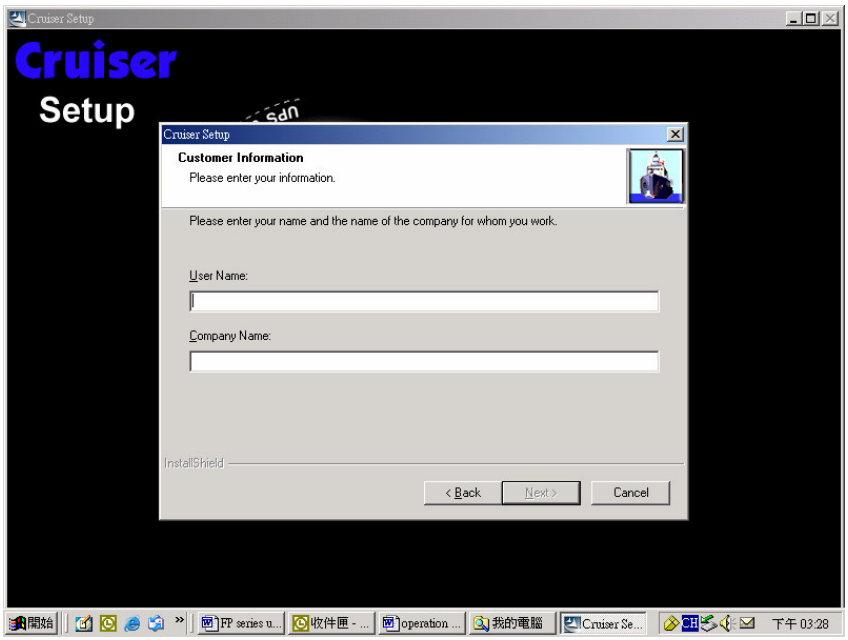

Step 3: Type in the Serial Number

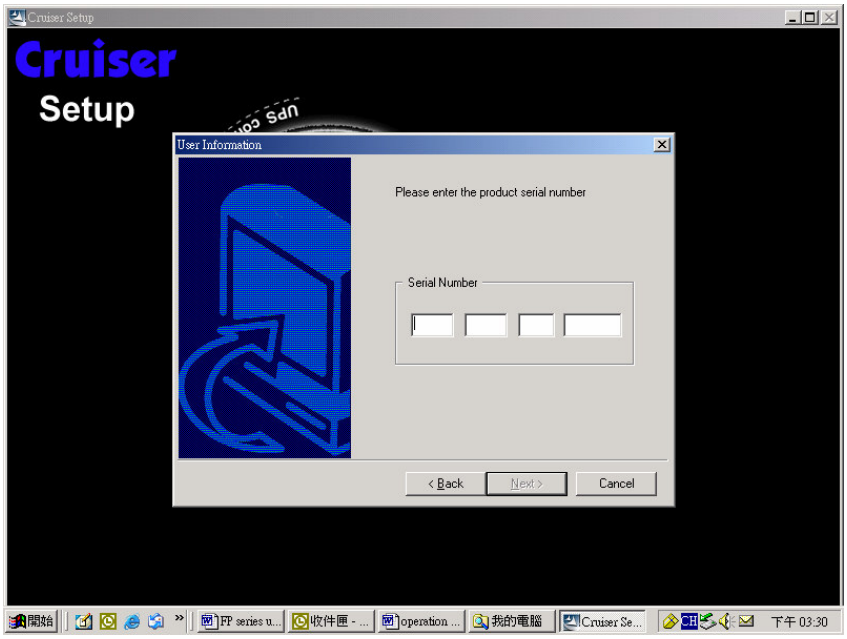

Software Set-up

6.1. General windows software installation cont…..

Step 4: Choice the Destination Folder

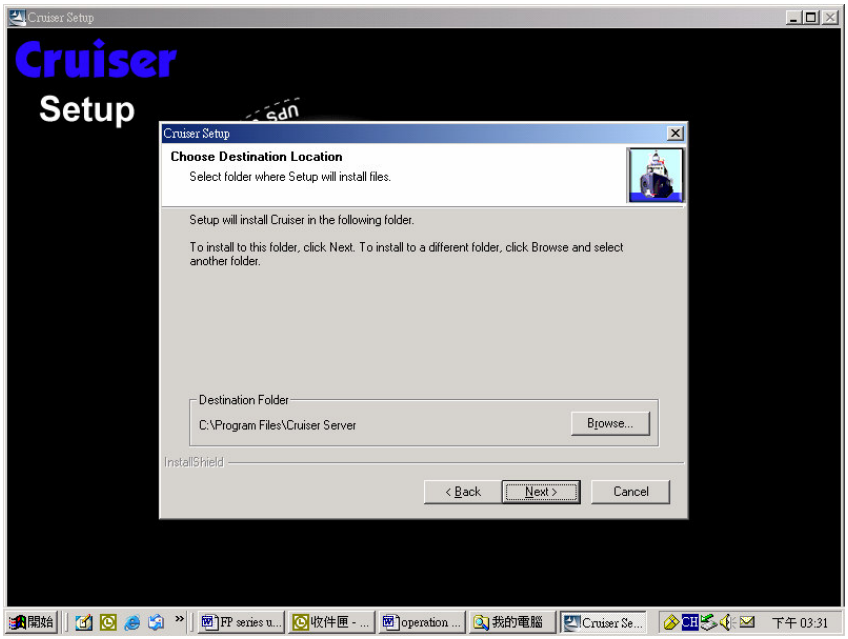

Step 5: Restart the computer

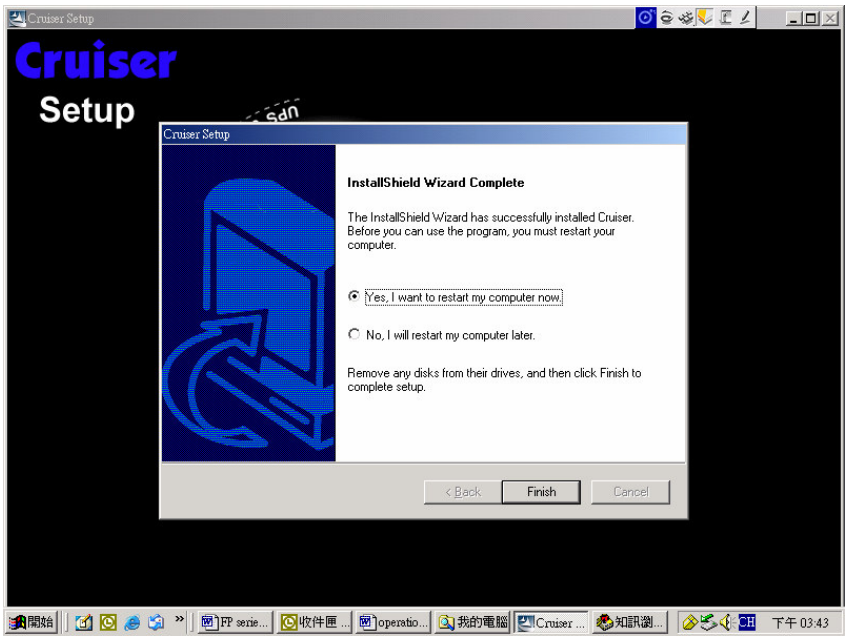

Software Set-up

6.1. General windows software installation cont…

Step 6: The setup process will create the Cruiser program group in Programs Files and add its icon  to System task bar. Right click on Cruiser icon then select "Show Monitoring Window".

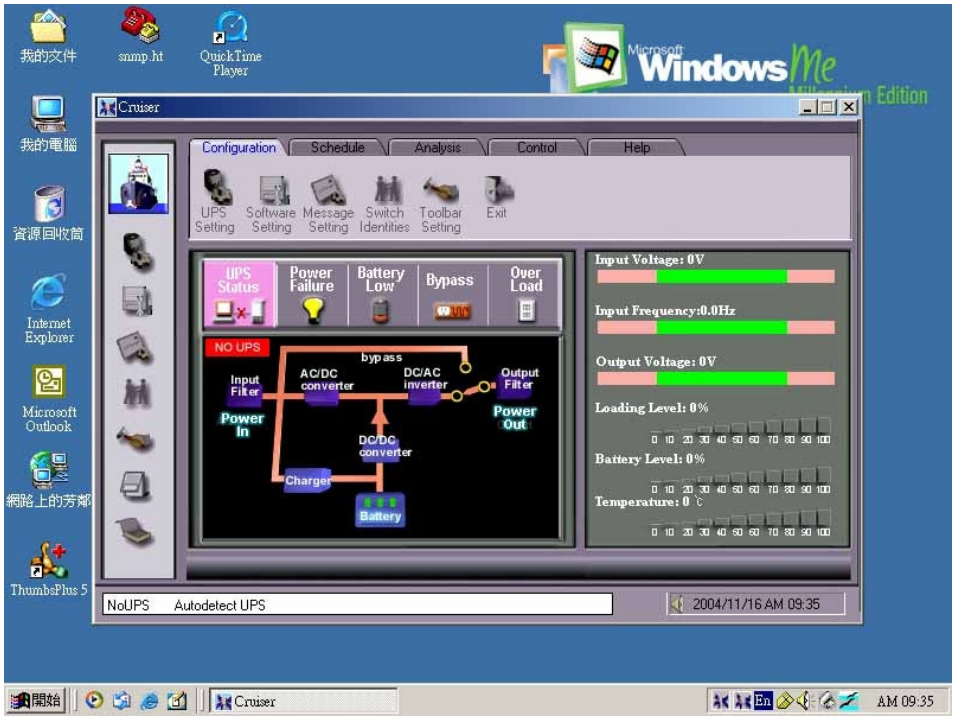

7. Specification

7.1. General specification

Input

Input Voltage	•	*176-276 VAC full load,* *125–276 VAC 25% load,* *without using battery*
Input Frequency	•	*50/60 Hz autosensing (45-65 Hz)*
Input Power factor	•	*>0.98 at full load*
Crest Factor	•	*3:1*
Input protection	•	*breaker*

Output

Output Voltage	•	*208/220/230/240 VAC selectable* *via front panel LCM*
Output Regulation	•	*±2% of nominal*
Output Waveform	•	*Sine wave*
Output THD	•	*<3%*
Output Protection	•	*Electronic overload sensing*
Efficiency (AC-AC)	•	*90%*
Overload Capacity	•	*105% for 120 secs* *150% for 10 secs*
Output Frequency	•	*50/60Hz autosensing to input*

General

Input Receptacles	•	*Hardwired* *Dual feed*
Output Receptacles	•	*Hardwired*
Display/Alarm	•	*Front Panel LCM* *audible alarms*
Interface *(Rear Panel)*	•	*2 x RS232* *Option slot for SNMP/USB*

Specification

7.1. General specification cont….

Software	•	*Supplied bundled to support Windows 95, 98, ME, 2000, XP & NT, & Novell*
REPO	•	*Connector on rear of unit Remove link to power off*

Environmental

Operating Temperature	•	*0 °C to +40 °C*
Storage Temperature	•	*-15 °C to +50 °C*
Relative Humidity	•	*0-95% RH non-condensing*
Altitude	•	*3000 m without derating*
Acoustic Noise	•	*<45 dBA at 1 metre*

Battery

Internal Battery Type	•	*VRLA 5 year design life, 10 year option add suffix 'X" to model number*
Battery Replacement	•	*Hot swap*
Recharge	•	*<4 hours to 90%, standard battery only*
Battery string Voltage	•	*192 V*
Autonomy	•	*See Tables*
Battery Module	•	*2 x 48 VDC packs per module*
Temperature	•	*Autonomy, recharge & battery life based on 25 °C ambient*

7.2. Run time chart FP6000

RUN TIME CHART (IN MINUTES)	
UPS MODEL	Autonomy vs Load
	6000VA(4200W)
FP6000	5
+2BM	15
+4BM	28
+6BM	46

For extended run times, please contact point of sale.

7.3. Fixing centres and Dimension tables

Rack mount Fixing centres for Guides

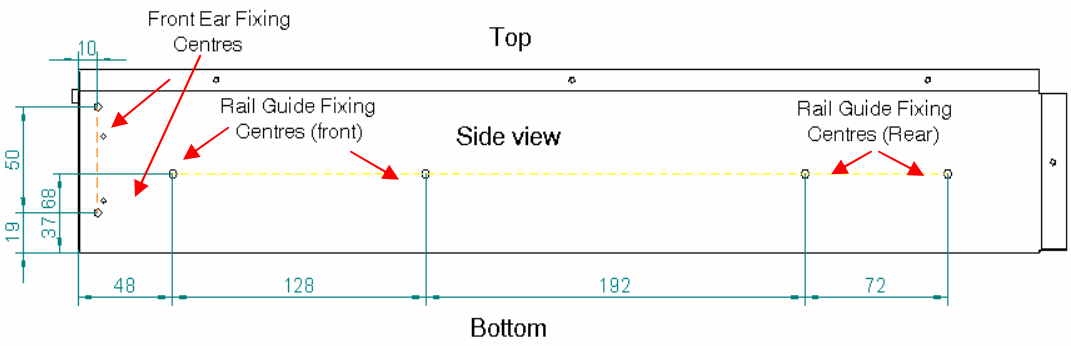

Dimensions

FP6000

H * D * W 355.6mm * 510mm * 426mm

BATTERY MODULE

H * D * W 88.9mm * 510mm * 426mm

Weights

FP6000	**28+28+28 kg (84)**
BATTERY MODULE	**4+12+12 kg (28)**